GH-40323
GH-431
GH-40341

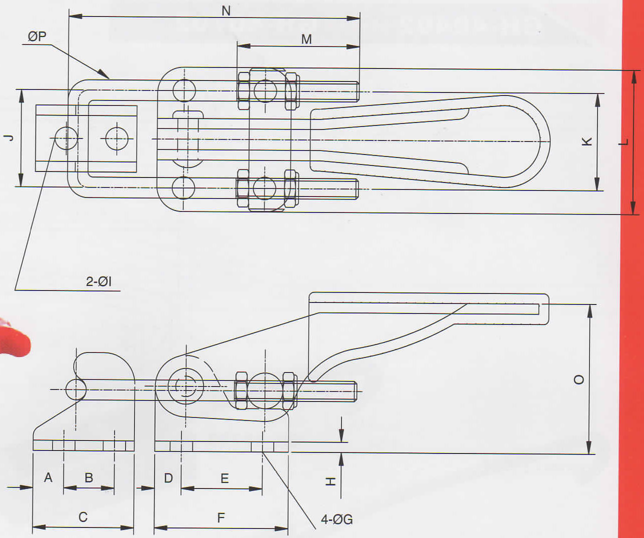
N
ØP
M
J
K
L
2-ØI
O
A
B
C
D
E
F
H
4-ØG

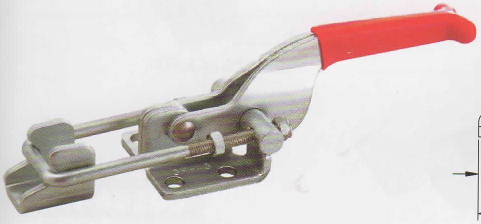

GH-431

UNT:mm

MODEL	WEIGHT(g)	HOLDING CAPACITY(kg)	A	B	C	D	E	F	ØG	H	ØI	J	K	L	M	N	O	P
GH-40323	70	163	6	9.9	19.8	5.2	15.9	26.2	4.4	2	4.4	19	19	28.2	24	57	29.3	4
GH-431	225	318	6.8	11.5	25.4	6.4	19	39.7	6.7	3.2	6.3	31.8	26.6	44.4	38	73	41.3	5
GH-40341	680	900	9.5	19.1	38.1	9.5	41.3	60.3	8.6	4	8.5	38.1	44.5	54	52	114.5	74	8
GH-40323-SS	STAINLESS STEEL																	
GH-431M-SS																		
GH-40341-SS																		

GH-40324 THRU GH-40344

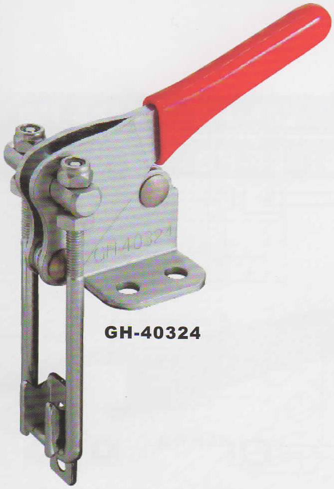

GH-40324

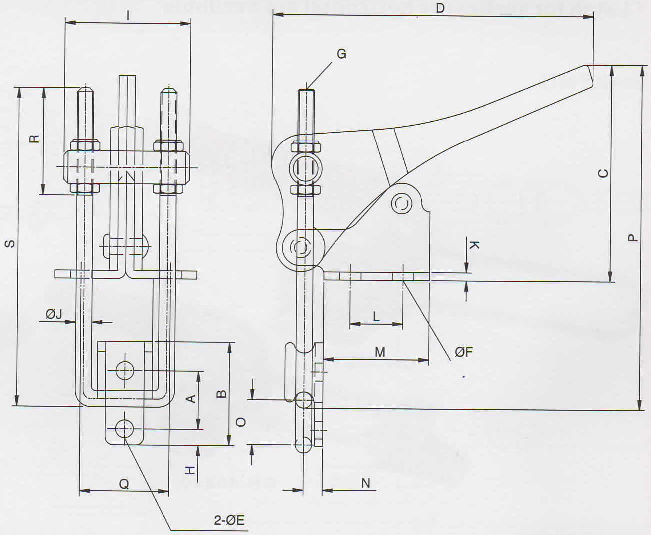
I
D
G
R
S
C
P
K
ØJ
L
M
ØF
A
B
O
H
Q
N
2-ØE

UNT:mm

MODEL	WEIGHT(g)	HOLDING CAPACITY(kg)	A	B	C	D	ØE	ØF	G	H	I	ØJ	K	L	M	N	O	P	Q	R	S
GH-40324	113	225	14.3	25.4	53.3	79	4.4	5.3	M4 P=0.7	4	31	4	2	13	26	4.7	11.1	70	22	26.5	78.5
GH-40334	250	450	20.6	38.1	61.9	120	7.1	7.1	M16 P=1	7.1	41.3	6.35	3	19.1	33.3	8.7	17.5	102	25.4	40.5	114
GH-40344	700	900	27	54	84.1	130.2	8.7	5.3	M8 P=1.25	9.5	60.3	7.9	4	31.8	47.6	12.7	28.6	150	36.5	58	154
GH-40324-SS	STAINLESS STEEL																				
GH-40334-SS																					
GH-40344-SS																					

LATCH TYPE TOGGLE CLAMPS

GH-40402 AND GH-40702

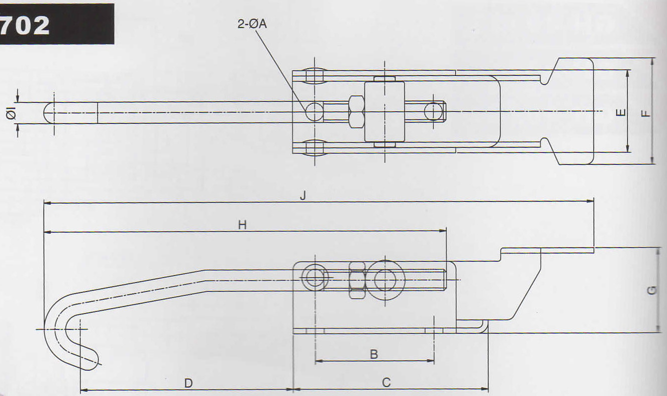
2-ØA
ØI
E
F
J
H
G
B
D
C

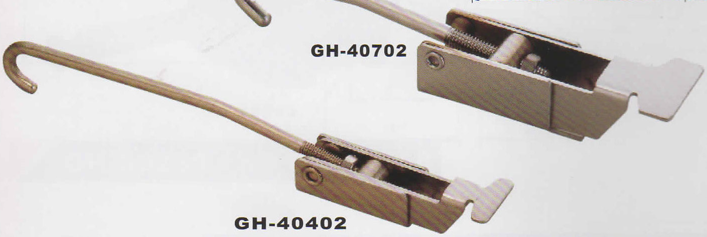

GH-40702

GH-40402

UNT:mm

MODEL	WEIGHT(g)	øA	B	C	D	E	F	G	H	øI	J
GH-40402	130	6.5	36	85	86.83	20	28	23	140	6	183.7
GH-40702	245	6.7	44.5	73.2	79.96	31	40	32	151.06	8	206.5
GH-40402-SS	STAINLESS STEEL										

GH-40820 AND GH-40840 AND GH-40870

- Two function...
- Latch for vertical or horizontal are available

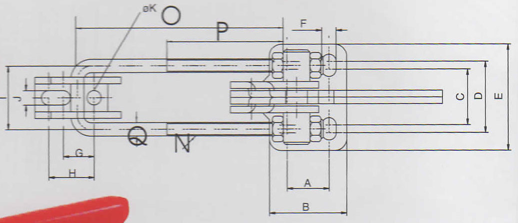
øK
O
P
F
J
Q
N
G
H
A
B
C
D
E

GH-40870

GH-40840

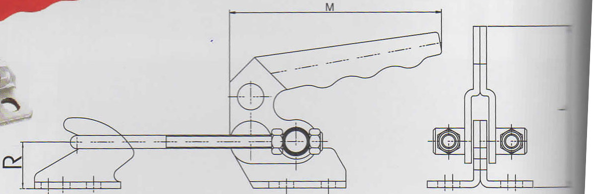

UNT:mm

MODEL	WEIGHT(g)	HOLDING CAPACITY(kg)	A	B	C	D	E	F	G	H	I	J	K	L	M	N	O	P	Q	R
GH-40820	120	200	13	26	19	24	36	5.2	11	16	21	23	5.2	46	65	M4×0.7	92	55	4	12.9
GH-40840	306	400	19	35	25	32	48	6.5	14	18.5	28.5	39	6.5	73	97	M6×1.0	113.5	70	6	21
GH-40870	700	700	32	50.5	36	45	63.5	8.5	19	28	44.5	40	8.5	88	117	M8×1.25	150	85	8	24.4

GH-43101

- WHIGHT:310g
- HOLDING CAPACITY:170kg

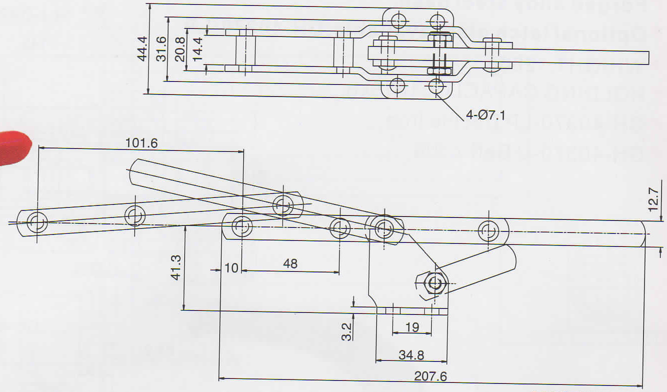
44.4
31.6
20.8
14.4
4-Ø7.1
101.6
12.7
41.3
10
48
3.2
19
34.8
207.6

GH-43101

UNT:mm

GH-40200

- WHIGHT:155g
- HOLDING CAPACITY:200kg

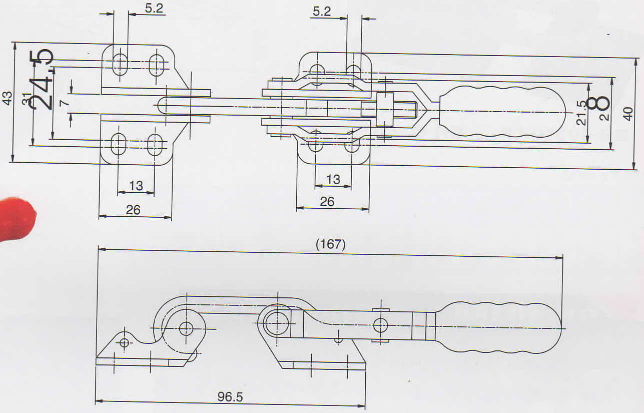
5.2
5.2
43
31
24.5
7
21.5
8
2
40
13
26
13
26
(167)
96.5

GH-40200

UNT:mm

GH-451 GH-452
GH-40371 GH-43810

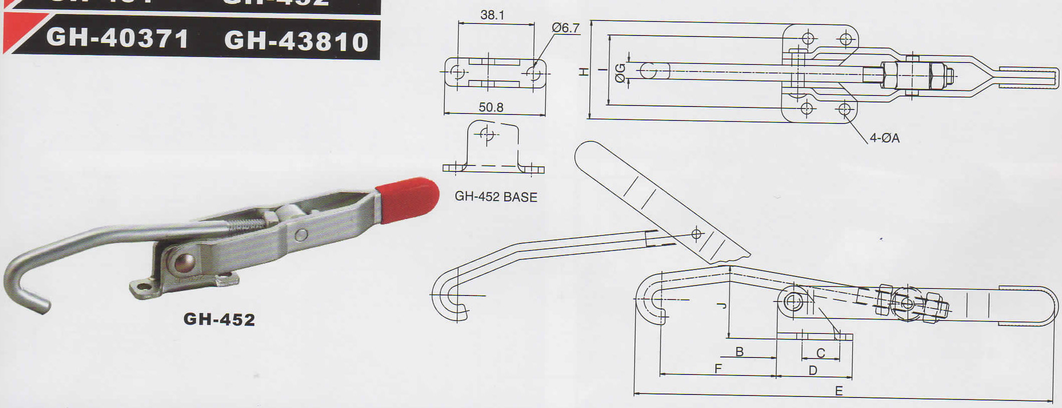
38.1
Ø6.7
50.8
H
ØG
4-ØA
GH-452 BASE
J
B
C
F
D
E

GH-452

MODEL	WEIGHT(g)	HOLDING CAPACITY(kg)	DESCRIPTION	ØA	B	C	D	E	F	ØG	H	I	J
GH-451	270	170	FLANGED BASE	5.6	12.7	19	38.1	211	58.4	8	49.2	34.9	36.5
GH-452	255	170	NARROW BASE	6.7	–	38.1	50.8	211	44.75	8	–	–	36.5
GH-40371	624	340	FLANGED BASE	8.7	7.9	31.8	47.6	285	79.4	9.5	65.7	49.2	57.3
GH-43810	1130	450	FLANGED BASE	10.3	12.7	28.6	54	336	76.2	12.7	85.7	60.3	68
GH-451-SS	STAINLESS STEEL												
GH-452-SS	STAINLESS STEEL												

UNT:mm

GH-40370 AND GH-40370-LP

- Forged alloy steel base.
- Optional latch plate available:GH-40370-LP
- WHIGHT:1260g
- HOLDING CAPACITY:1818kg
- GH-40370-LP Ductile iron
- GH-40370-U Bolt ϕ3/8

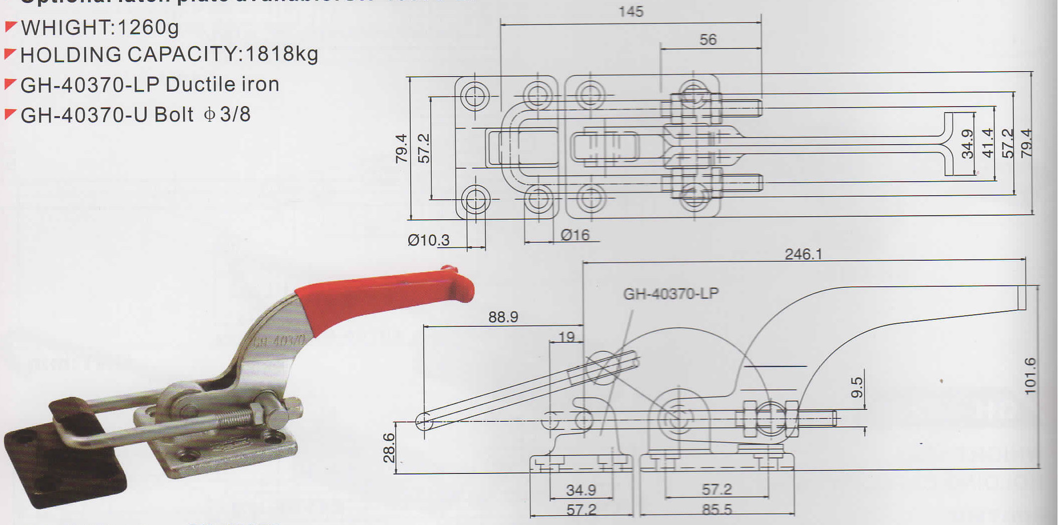
145
56
79.4
57.2
34.9
41.4
57.2
79.4
Ø10.3
Ø16
246.1
GH-40370-LP
88.9
19
9.5
101.6
28.6
34.9
57.2
57.2
85.5
GH-40370

GH-40370-LP **GH-40370**

UNT:mm

GH-40380 AND GH-40380-SS

- Forged alloy steel handle & base.

- Optional latch plate available:GH-40370-LP
- WHIGHT:1480g
- HOLDING CAPACITY:3400kg
- GH-40380-SS & LATCH PLATE are stainless steel
- GH-40380 U Bolt φ1/2

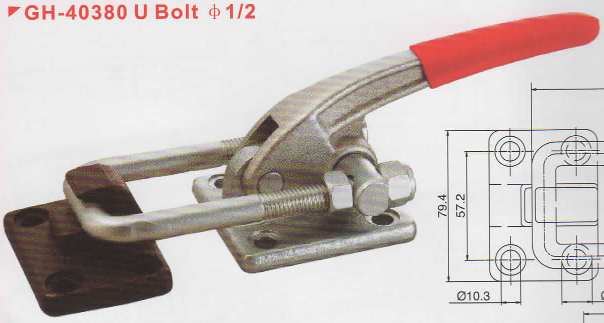

GH-40370-LP **GH-40380**

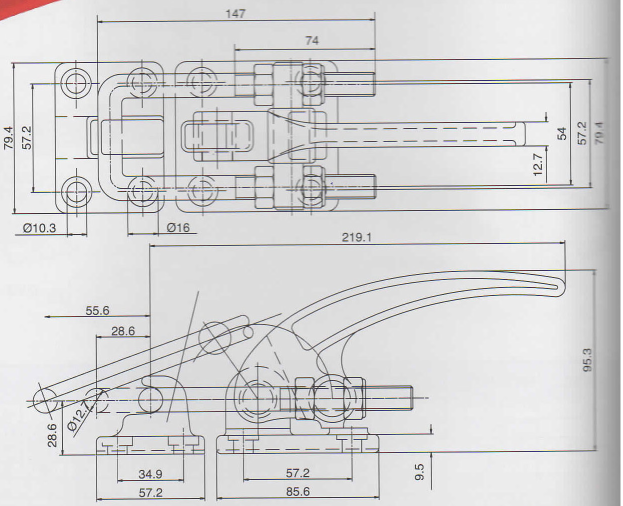
147
74
79.4
57.2
54
57.2
79.4
12.7
Ø10.3
Ø16
219.1
55.6
28.6
95.3
Ø12.7
28.6
34.9
57.2
57.2
85.6
9.5

UNT:mm

GH-40550 AND GH-40580

- Optional latch plate available:GH-40580-LP
- Optional latch plate available:GH-40550-LP

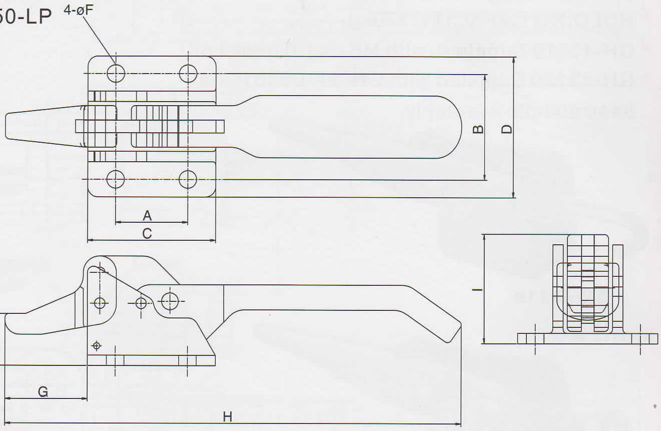
4-øF
B
D
A
C
E
G
H
I

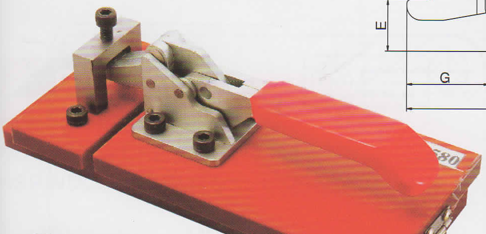

GH-40550 **GH-40580**

UNT:mm

MODEL	WEIGHT(g)	A	B	C	D	E	øF	G	H	I
GH-40550	200	19	32	31	42	17.5	6.5	22	116	33
GH-40580	940	35	51	62	68	25	8.5	40	222	52.8

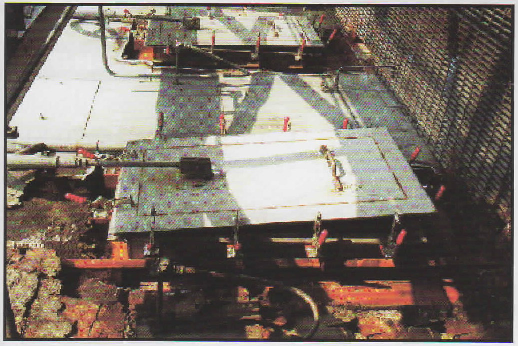

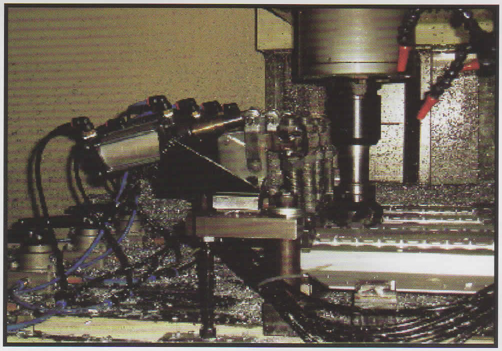

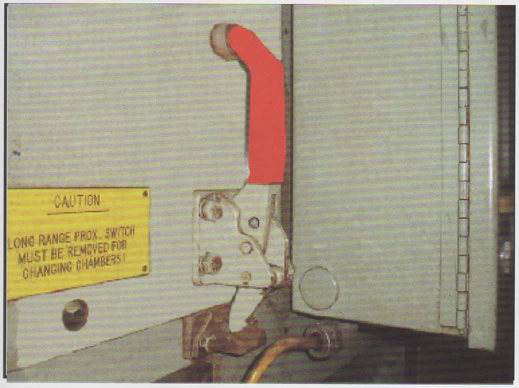
CAUTION
LONG RANGE PROX. SWITCH MUST BE REMOVED FOR CHANGING CHAMBERS!

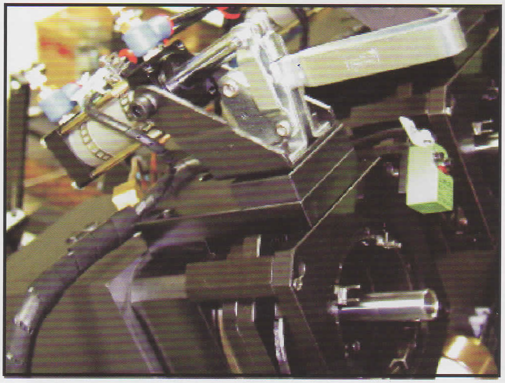

LATCH TYPE TOGGLE CLAMPS

GH-43110 AND GH-43120

- WHIGHT:180g
- HOLDING CAPACITY:170kg
- GH-43110 Supplied with M6 P=1.0 hook bolt.
- GH-43120 Supplied with GH-SA-065010 hex head spindle assembly.

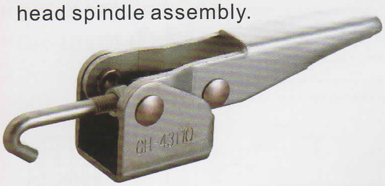

GH-43110

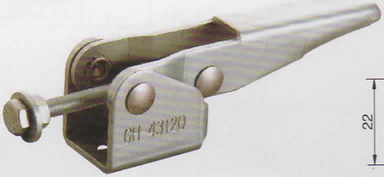

GH-43120

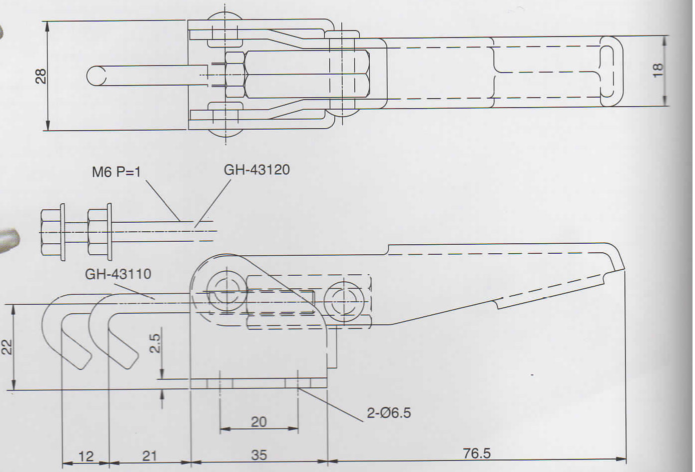
28
18
M6 P=1
GH-43120
GH-43110
22
2.5
2-Ø6.5
20
12
21
35
76.5

GH-43150 AND GH-43160

- WHIGHT:385g
- HOLDING CAPACITY:300kg
- GH-43150 Supplied with M10 P=1.5 hook bolt.
- GH-43160 Supplied with GH-SA-107515 hex head spindle assembly.

UNT:mm

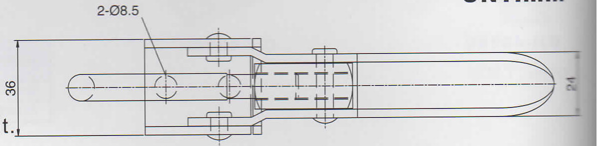

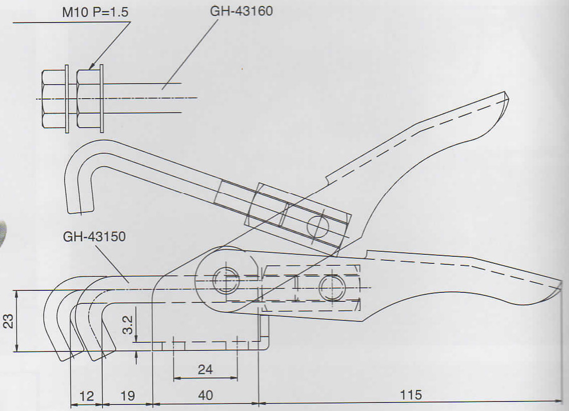
M10 P=1.5
GH-43160
GH-43150
23
3.2
24
12
19
40
115

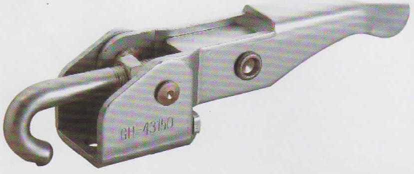

GH-43150

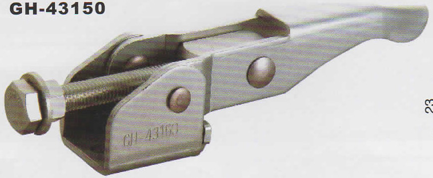

GH-43160

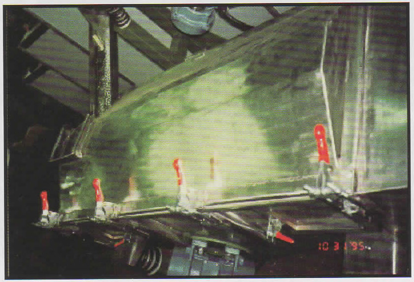

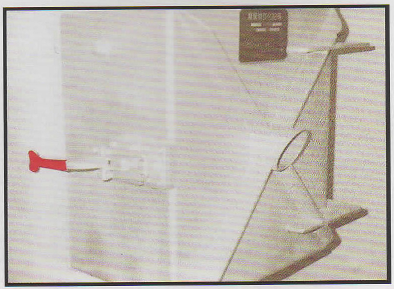

UNT:mm